RE 18330-75/07.10
Replaces: RE 00199/11.07

Dual counterbalance, relief compensated, poppet type

Double common cavity

Cartridge style in manifold

VBSP-DE-C 2Y.03 - K - X - Y - Z - W

Dimensions

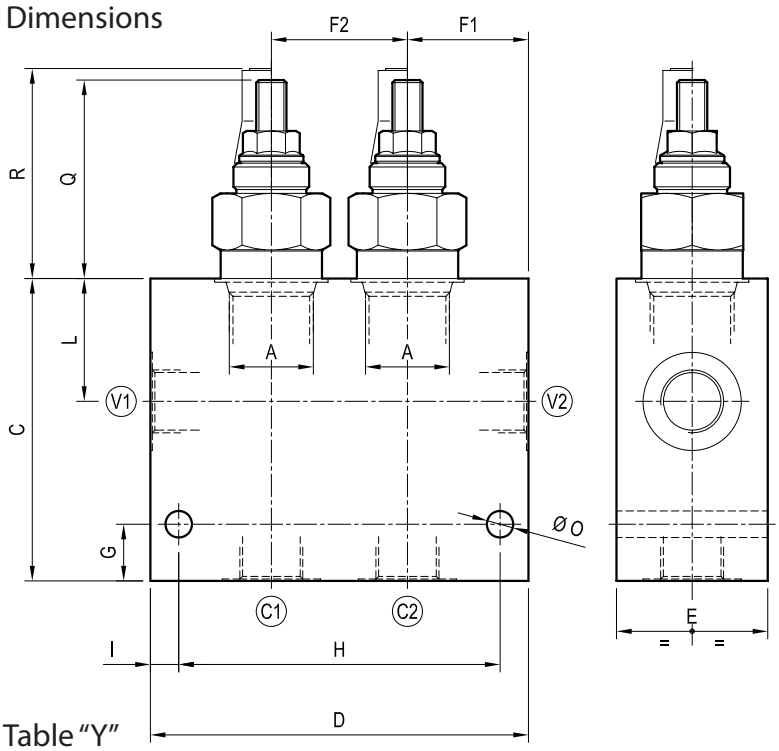

Technical data

Max flow:	up to 320 l/min	(85 gpm)
Max operating pressure for steel body:	350 bar	(5000 psi)
Max operating pressure for aluminium body:	210 bar	(3000 psi)

To order only manifold see data sheet RE 18325-85

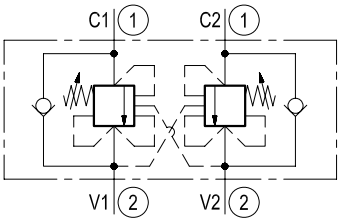

Table "Y"

Cavity A	Y	PORT SIZE V1-V2-C1-C2	Max Flow l/min (gpm)	DIMENSIONS mm (Inches) C	D	E	F1	F2	G	H	I	L	M	O	Q	R
SIZE 08	02	G 3/8	30 (8)	60 (2.36)	90 (3.54)	30 (1.18)	27 (1.06)	36 (1.42)	15 (0.59)	75 (2.95)	7.5 (0.3)	27.5 (1.08)		7 (0.28)	55 (2.17)	64 (2.52)
SIZE 10	02	G 3/8	60 (16)	80 (3.15)	100 (3.94)	40 (1.58)	32 (1.26)	36 (1.42)	15 (0.59)	85 (3.35)	7.5 (0.30)	32.5 (1.28)		7 (0.28)	53 (2.09)	59 (2.32)
	03	G 1/2		80 (3.15)	100 (3.94)	40 (1.58)	32 (1.26)	36 (1.42)	15 (0.59)	85 (3.35)	7.5 (0.30)	32.5 (1.28)		7 (0.28)		
SIZE 12	03	G 1/2	120 (32)	90 (3.54)	125 (4.92)	50 (1.97)	40 (1.58)	45 (1.77)	15 (0.59)	105 (4.13)	10 (0.39)	41.5 (1.63)		7 (0.28)	61 (2.4)	67 (2.64)
	04	G 3/4		90 (3.54)	125 (4.92)	50 (1.97)	40 (1.58)	45 (1.77)	15 (0.59)	105 (4.13)	10 (0.39)	41.5 (1.63)		7 (0.28)		
SIZE 16	05	G 1	200 (53)	90 (3.54)	145 (5.71)	50 (1.97)	45 (1.77)	55 (2.17)	22 (0.87)	125 (4.92)	10 (0.39)	38.5 (1.52)		9 (0.35)	73 (2.87)	80 (3.15)
SIZE 20	06	G 1 1/4	320 (85)	120 (4.72)	175 (6.89)	60 (2.36)	55 (2.17)	65 (2.56)	25 (0.98)	150 (5.91)	12.5 (0.49)	51 (2.01)		11 (0.43)	65 (2.56)	72.5 (2.85)

Cartridge style

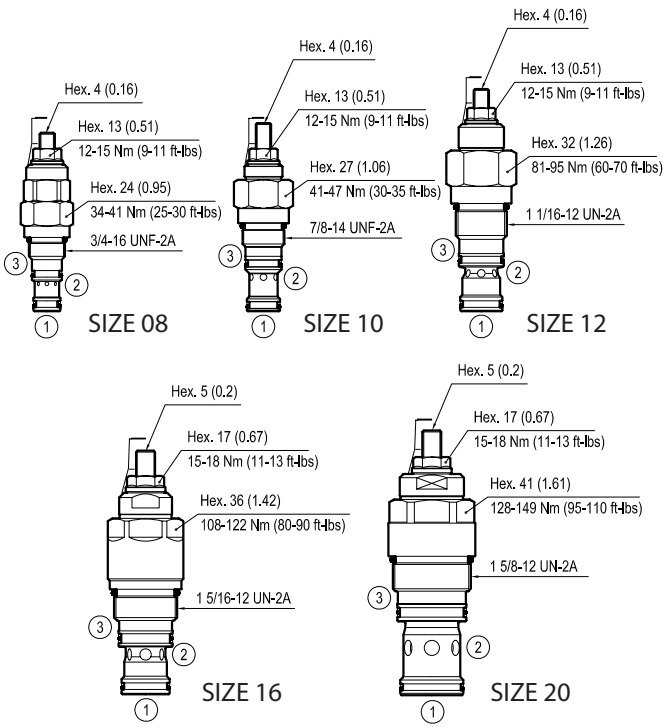

[mm (inches)]

Table "K"

			K				
CARTRIDGE CODE	04	54	04	X	56	Z	VBSP-08AA
	04	54	09	X	85	Z	VBSP-10A
	04	54	08	X	57	Z	VBSP-12A
	04	54	10	X	27	Z	VBSP-16A
	04	54	13	X	58	Z	VBSP-20A

Table "X"

X	PILOT RATIO	
03	4 : 1	3:1 only for K=09 version

OPTIONS	
Ordering code	
K=04,09,08	11.04.23.002
K=10,13	11.04.23.004

CARTRIDGE TECHNICAL DATA
Common cavity: CA-08A-3C / CA-10A-3C / CA-12A-3C / CA-16A-3C / CA-20A-3C For other details see data sheet RE 18320-06, RE 18320-07, RE 18320-08, RE 18320-09 and RE 18320-10

Table "Z"

Z	SIZE 08			SIZE 10			SIZE 12			SIZE 16			SIZE 20		
	Adj. press. range bar(psi)	Pres. increase bar/turn (psi/turn)	Std. setting 5 l/min bar (psi)	Adj. press. range bar(psi)	Pres. increase bar/turn (psi/turn)	Std. setting 5 l/min bar (psi)	Adj. press. range bar(psi)	Pres. increase bar/turn (psi/turn)	Std. setting 5 l/min bar (psi)	Adj. press. range bar(psi)	Pres. increase bar/turn (psi/turn)	Std. setting 5 l/min bar (psi)	Adj. press. range bar(psi)	Pres. increase bar/turn (psi/turn)	Std. setting 5 l/min bar (psi)
20	100-210 (1450-3000)	109 (1581)	200 (2900)	70-210 (1000-3000)	135 (1958)	200 (2900)	70-210 (1000-3000)	50 (725)	200 (2900)	70-210 (1000-3000)	70 (1015)	200 (2900)	70-210 (1000-3000)	70 (1015)	200 (2900)
35	200-350 (2900-5000)	137 (1987)	350 (5000)	140-350 (2000-5000)	196 (2842)	350 (5000)	140-350 (2000-5000)	159 (2306)	350 (5000)	140-350 (2000-5000)	108 (1566)	350 (5000)	140-350 (2000-5000)	108 (1566)	350 (5000)

Performance graphs

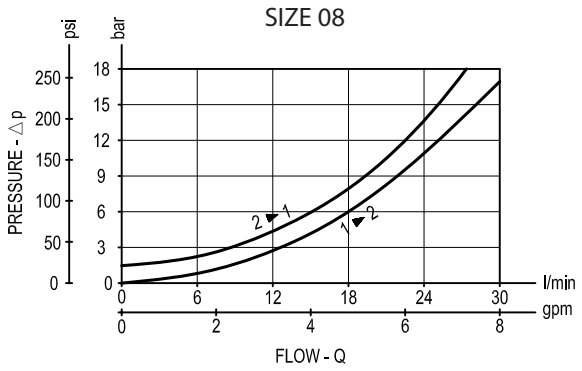

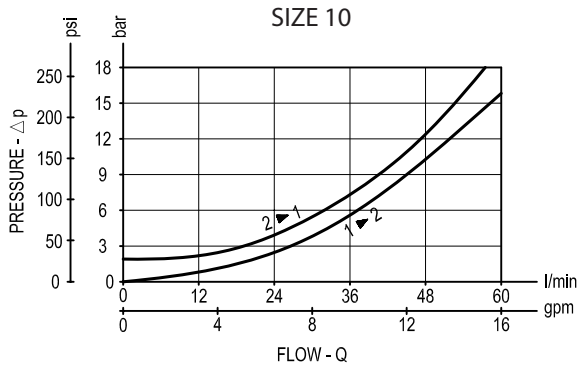

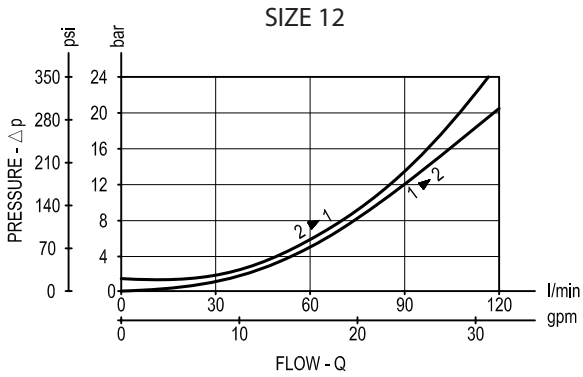

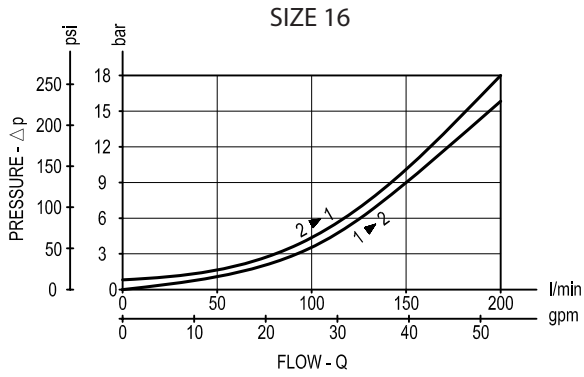

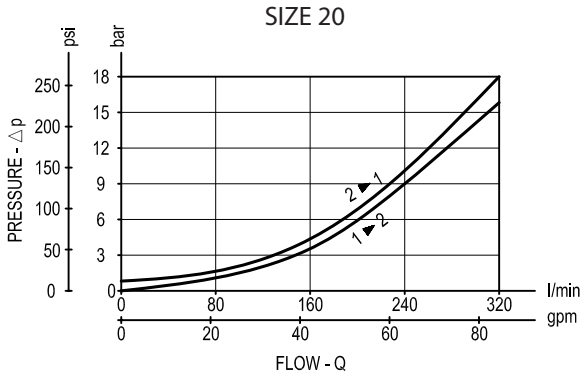

Ordering code

2Y.03	K	X	Y	Z	W

Manifold with dual counterbalance, relief compensated, poppet type

Cartridge style - Common cavity (see table K on page 2)

Cartridge style - Pilot ratio (see table X on page 2)

Manifold style - Dimensions and port sizes (see table Y on page 1)

Settings - Springs (see table Z on page 2)

Manifold material

= 00	Aluminium manifold
= S0	Steel manifold

Preferred types (readily available)

Type	Material number
2Y0304030220S0	R934001325
2Y0304030235S0	R934001326
2Y0309030320S0	R934001328
2Y0309030335S0	R934001329
2Y0308030420S0	R934001332
2Y0308030435S0	R934001333
2Y0310030520S0	R934001335
2Y0310030535S0	R934001336
2Y0313030620S0	R934001344
2Y0313030635S0	R934001346
2Y030803032000	R934003938
2Y030903032000	R934003843

Type	Material number

Further types available by request

Bosch Rexroth Oil Control S.p.A.
Via Leonardo da Vinci 5
P.O. Box no. 5
41015 Nonantola – Modena, Italy
Tel. +39 059 887 611
Fax +39 059 547 848
integrated-circuits@oilcontrol.com
www.boschrexroth.com

© This document, as well as the data, specifications and other information set forth in it, are the exclusive property of Bosch Rexroth Oil Control S.p.a.. It may not be reproduced or given to third parties without its consent.

The data specified above only serve to describe the product. No statements concerning a certain condition or suitability for a certain application can be derived from our information. The information given does not release the user from the obligation of own judgment and verification. It must be remembered that our products are subject to a natural process of wear and aging.

Subject to change.