RE 18330-71/07.10
Replaces: RE 00199/11.07

Dual pilot operated check

Double common cavity
Cartridge style in manifold

VSO-DE-C 2Y.01 - K - X - Y - Z - W

Dimensions

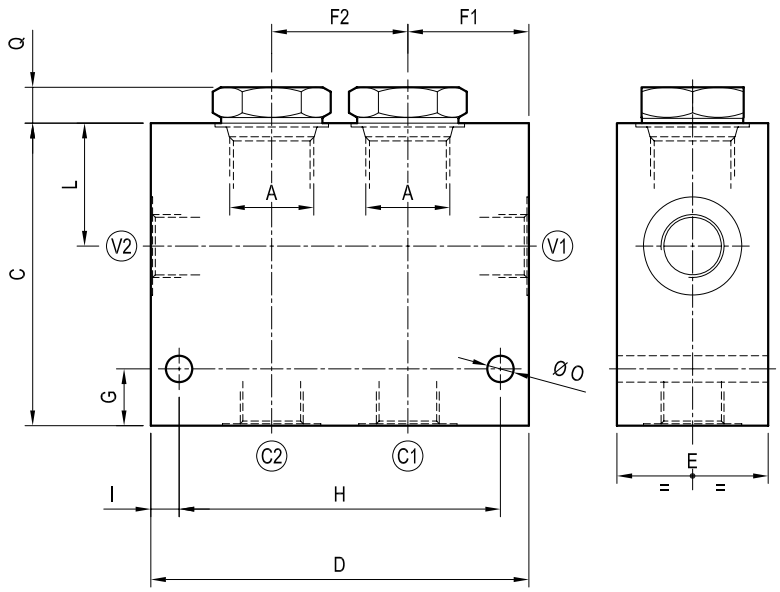

Technical data

Max flow:	up to 200 l/min	(53 gpm)
Max operating pressure for steel body:	350 bar	(5000 psi)
Max operating pressure for aluminium body:	210 bar	(3000 psi)

In case of valve application in redundancy systems it is especially recommended to use version with sealed pilot piston.

To order only manifold see data sheet RE 18325-85

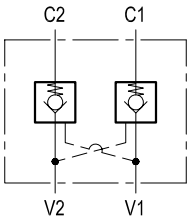

Table "Y"

Cavity A	Y	PORT SIZE V1-V2-C1-C2	Max Flow l/min (gpm)	DIMENSIONS mm (Inches) C	D	E	F1	F2	G	H	I	L	M	O	Q	R
SIZE 08	02	G 3/8	30 (8)	60 (2.36)	90 (3.54)	30 (1.18)	27 (1.06)	36 (1.42)	15 (0.59)	75 (2.95)	7.5 (0.3)	27.5 (1.08)		7 (0.28)	9 (0.35)	
SIZE 10	02	G 3/8	60 (16)	80 (3.15)	100 (3.94)	40 (1.58)	32 (1.26)	36 (1.42)	15 (0.59)	85 (3.35)	7.5 (0.30)	32.5 (1.28)		7 (0.28)	10 (0.39)	
	03	G 1/2		80 (3.15)	100 (3.94)	40 (1.58)	32 (1.26)	36 (1.42)	15 (0.59)	85 (3.35)	7.5 (0.30)	32.5 (1.28)		7 (0.28)		
SIZE 12	03	G 1/2	120 (32)	90 (3.54)	125 (4.92)	50 (1.97)	40 (1.58)	45 (1.77)	15 (0.59)	105 (4.13)	10 (0.39)	41.5 (1.63)		7 (0.28)	18 (0.71)	
	04	G 3/4		90 (3.54)	125 (4.92)	50 (1.97)	40 (1.58)	45 (1.77)	15 (0.59)	105 (4.13)	10 (0.39)	41.5 (1.63)		7 (0.28)		
SIZE 16	05	G 1	200 (53)	90 (3.54)	145 (5.71)	50 (1.97)	45 (1.77)	55 (2.17)	22 (0.87)	125 (4.92)	10 (0.39)	38.5 (1.52)		9 (0.35)	17 (0.67)	
SIZE 20																

Cartridge style

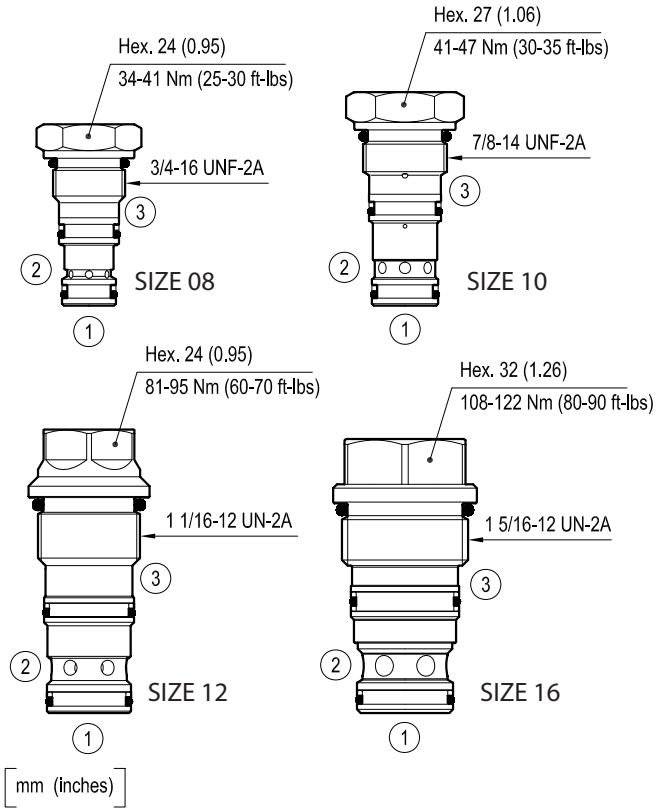

Table "K"

			K				
CARTRIDGE CODE	04	33	06	X	56	Z	VSON-08A
	04	33	05	X	85	Z	VSON-10A
	04	33	07	X	57	Z	VSON-12A
	04	33	08	X	27	Z	VSON-16A

Table "X"

X	O-RING ON PILOT PISTON
00	No O-Ring
10	With O-Ring

CARTRIDGE TECHNICAL DATA
Common cavity: CA-08A-3C / CA-10A-3C / CA-12A-3C / CA-16A-3C For other details see data sheet RE 18319-30, RE 18319-31, RE 18319-32 and RE 18319-33.

Table "Z"

Z	SPRINGS														
	SIZE 08			SIZE 10			SIZE 12			SIZE 16			SIZE 20		
	Cracking pressure bar(psi)			Cracking pressure bar(psi)			Cracking pressure bar(psi)			Cracking pressure bar(psi)			Cracking pressure bar(psi)		
00	2 (30)			2 (30)			2 (30)			1.5 (22)					
05	5 (75)														

Performance graphs

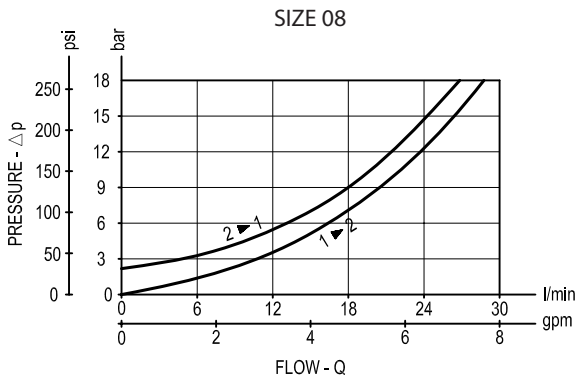

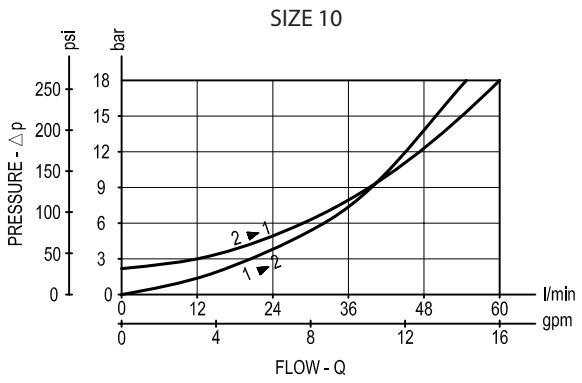

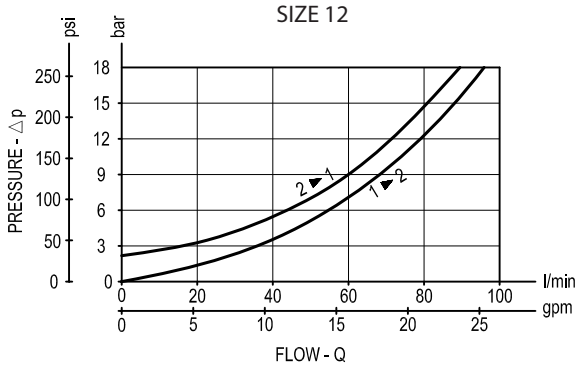

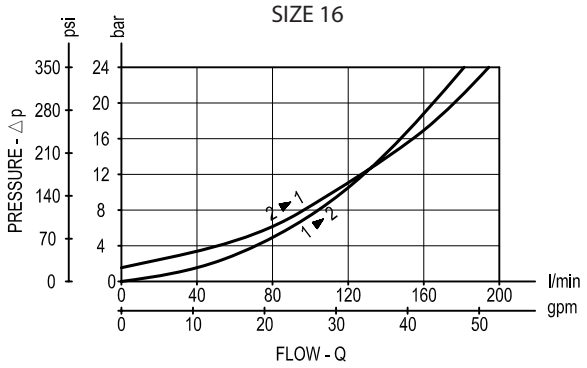

Ordering code

2Y.01	K	X	Y	Z	W

Manifold with dual pilot operated check

Cartridge style - Common cavity (see table K on page 2)

Cartridge style - O-Ring on pilot piston (see table X on page 2)

Manifold style - Dimensions and port sizes (see table Y on page 1)

Settings - Springs (see table Z on page 2)

Manifold material

= 00	Aluminium manifold
= S0	Steel manifold

Preferred types (readily available)

Type	Material number
2Y0106000200S0	R934001443
2Y0105000300S0	R934001445
2Y0107000400S0	R934001447
2Y0108000500S0	R934001449
2Y0105100300S0	R934000620
2Y0106100200S0	R934000619

Type	Material number

Further types available by request

Bosch Rexroth Oil Control S.p.A.
Via Leonardo da Vinci 5
P.O. Box no. 5
41015 Nonantola – Modena, Italy
Tel. +39 059 887 611
Fax +39 059 547 848
integrated-circuits@oilcontrol.com
www.boschrexroth.com

© This document, as well as the data, specifications and other information set forth in it, are the exclusive property of Bosch Rexroth Oil Control S.p.a.. It may not be reproduced or given to third parties without its consent.

The data specified above only serve to describe the product. No statements concerning a certain condition or suitability for a certain application can be derived from our information. The information given does not release the user from the obligation of own judgment and verification. It must be remembered that our products are subject to a natural process of wear and aging.

Subject to change.